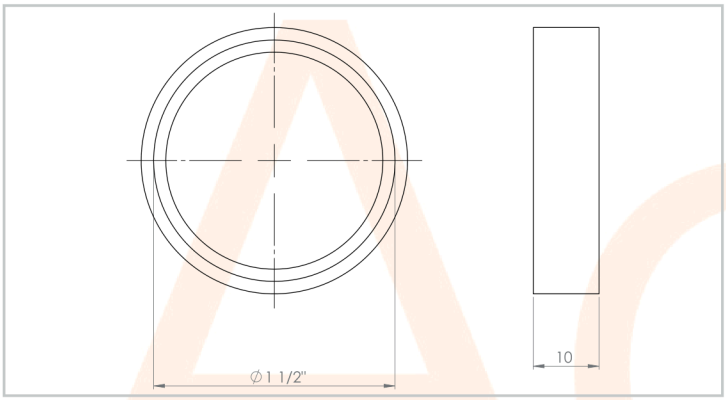

AC7384

Female Bush Short 1.5in Brass

Features & Benefits

Suitable for 1.5in. Conduit

Female Short

Technical Specification	
Material	Brass
Size	1 1/2"
Standards	BS EN 61386-1:2008

7-AC7384-2021-V1

Electric Center are not responsible for the accuracy and contents of this datasheet.
All displayed data and specification detail has been provided by the product manufacturer.