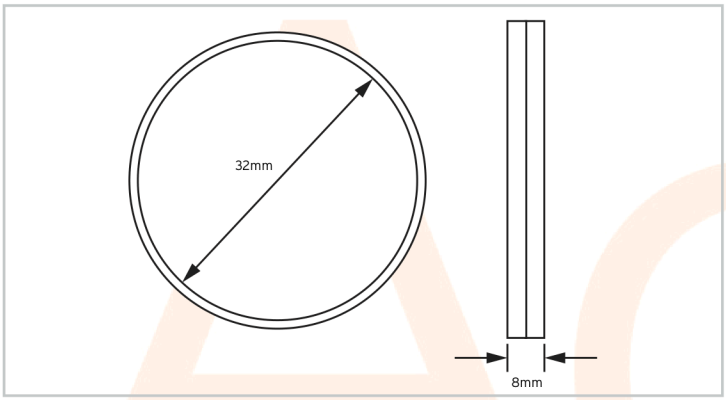

AC7383

Female Bush Short 32mm Brass

Features & Benefits to go here

Suitable for 32mm Conduit

Female Short

Technical Specification	
Material	Brass
Size	32mm
Standards	BS EN 61386-1:2008

7-AC7383-2021-V1

Electric Center are not responsible for the accuracy and contents of this datasheet.
All displayed data and specification detail has been provided by the product manufacturer.