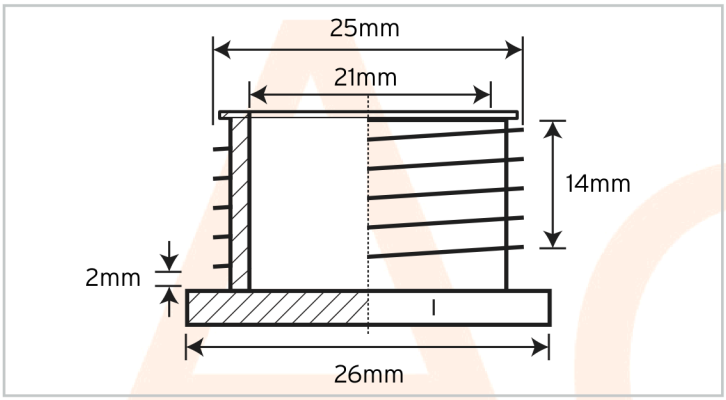

AC7377

Male Bush Long 25mm Brass

Features & Benefits

Suitable for 25mm Conduit

Male Long Pattern

Technical Specification	
Material	Brass
Thread length	14mm
Un-threaded space	2mm between the head and the thread
Size	25mm
Standards	BS EN 61386-1:2008

7-AC7377-2021-V1

Electric Center are not responsible for the accuracy and contents of this datasheet.
All displayed data and specification detail has been provided by the product manufacturer.