Acel

(4) LAMPS & LIGHTING

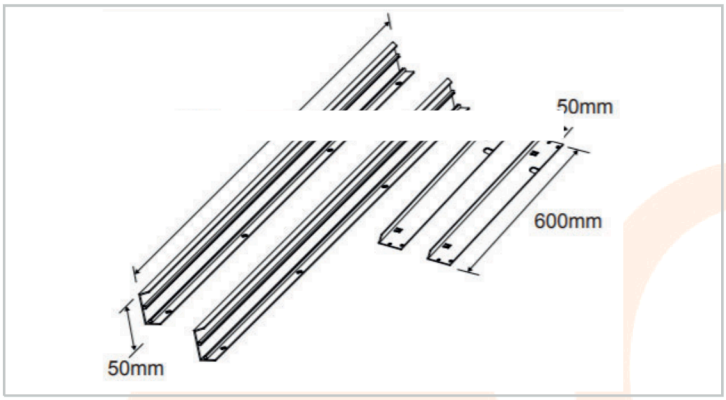

AC447161

Surface mount box kit, 60X120

- Allows for wall/ ceiling mounting of 1200 x 600 LED panel
- Driver concealed behind the fitting or located behind the wall/ceiling void
- Frams supplied flat packed must be assembled on site

Technical Specification	
Colour	White
Width (mm)	600
Depth (mm)	50
Length (mm)	1200
Unit Weight / kg	1.36

4-AC447161-2021-V1

Electric Center are not responsible for the accuracy and contents of this datasheet.
All displayed data and specification detail has been provided by the product manufacturer.