Acel

3 - Circuit Protection
& Industrial Control

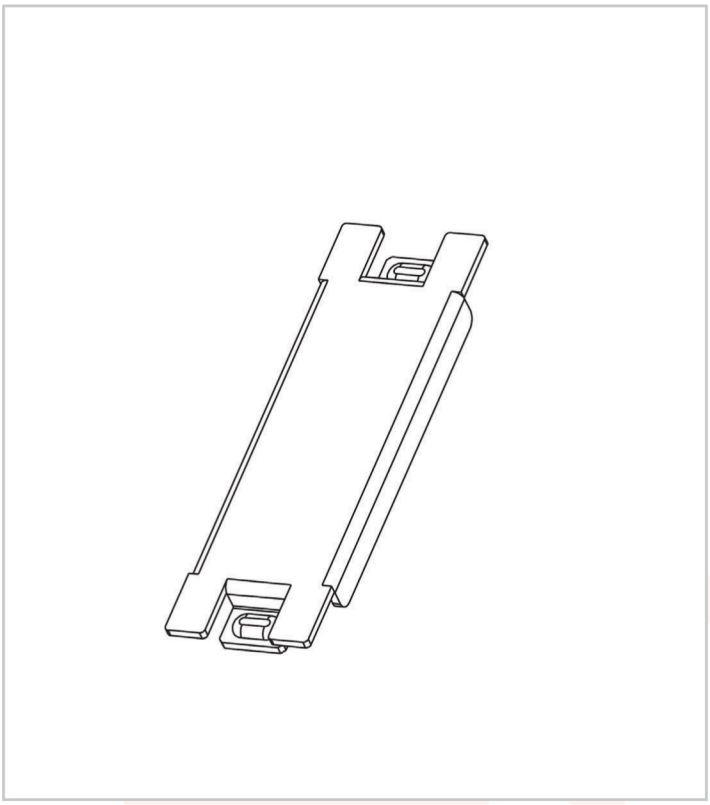

Acel part number (AC35032)

Metal blank 18mm module (6 pce)

Features and benefits

Metal Blank
18mm module
Fits on CU front cover

Technical Specification	
Attribute	Value
MATERIAL	STEEL
WEIGHT (1PC) Kg	0.06

3-AC35032-2024-V1

Electric Center are not responsible for the accuracy and contents of this datasheet.
All displayed data and specification detail has been provided by the product manufacturer.